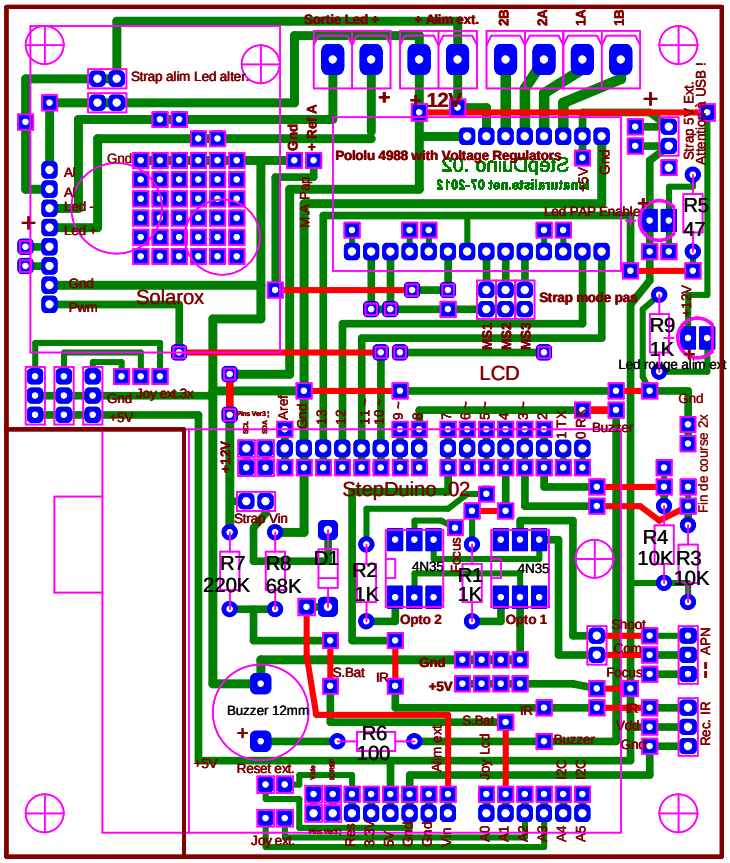

Sortie Led +
+ Alim ext.
2B
2A
1A
1B
Strap alim Led alter.
+ 12V
Pololu 4988 with Voltage Regulators
Strap 5V Ext. Attention à USB !
Gnd
+ Ref A
Led PAP Enable
R5
47
Solarox
Strap mode pas
R9
1K
Led rouge alim ext
LCD
Joy ext 3x
Gnd
+5V
Buzzer
Fin de course 2x
StepDuino 02
Strap Vin
R7
220K
R8
68K
D1
R2
1K
4N35
R1
1K
4N35
Opto 2
Opto 1
R4
10K
R3
10K
Shoot
Com
Focus
APN
S.Bat
IR
Gnd
+5V
Buzzer 12mm
R6
100
Reset ext.
Joy ext.
Rec. IR